nationalgrid

Figures

Figure A.1.1 2007/08 Transmission System with Large Power Stations as at 1 December 2006

Figure A.1.2 2007/08 Transmission System as at 1 December 2006

Figure A.1.3 GB Generation Use of System Tariff Zones, 2007/08

Figure A.1.4 GB Demand Use of System Tariff Zones, 2007/08

Figure A.1.5 GB National Parks, 2007/08

Figure A.1.6 GB Transmission Boundaries and SYS Study Zones, 2007/08

Figure A.2.1 SHETL Existing Transmission System, 2006/07

Figure A.2.2 SHETL Generation Use of System Tariff Zones (Electrical), 2007/08

Figure A.2.3 SHETL Transmission Boundaries and SYS Study Zones, 2013/14

Figure A.2.4 SHETL Existing and Planned Reactive Compensation Plant, 2013/14

Figure A.3.1 SPT Existing Transmission System, 2006/07

Figure A.3.2 SPT Generation Use of System Tariff Zones (Electrical), 2007/08

Figure A.3.3 SPT Transmission Boundaries and SYS Study Zones, 2013/14

Figure A.3.4 SPT Existing and Planned Reactive Compensation Plant, 2013/14

Figure A.4.1 NGET Existing Transmission System, 2006/07

Figure A.4.2 NGET Generation Use of System Tariff Zones (Electrical), 2007/08

Figure A.4.3 NGET Transmission Boundaries and SYS Study Zones, 2013/14

Figure A.4.4 NGET Existing and Planned Reactive Compensation Plant, 2013/14

Copyright © 2007 National Grid

Terms & conditions | Privacy policy

G.B. SYS. FIGURE A.1.1

2007/08 TRANSMISSION SYSTEM WITH LARGE POWER STATIONS AS AT 1st DECEMBER 2006

GB SYS FIG.A.1.2

2007/08 TRANSMISSION SYSTEM AS AT 1st DECEMBER 2006

ISSUE C 01-02-07 41/177123 © Collins Bartholomew Ltd 1999

GB SYS FIGURE A.1.3
GB GENERATION USE OF SYSTEM TARIFF ZONES 2007/08

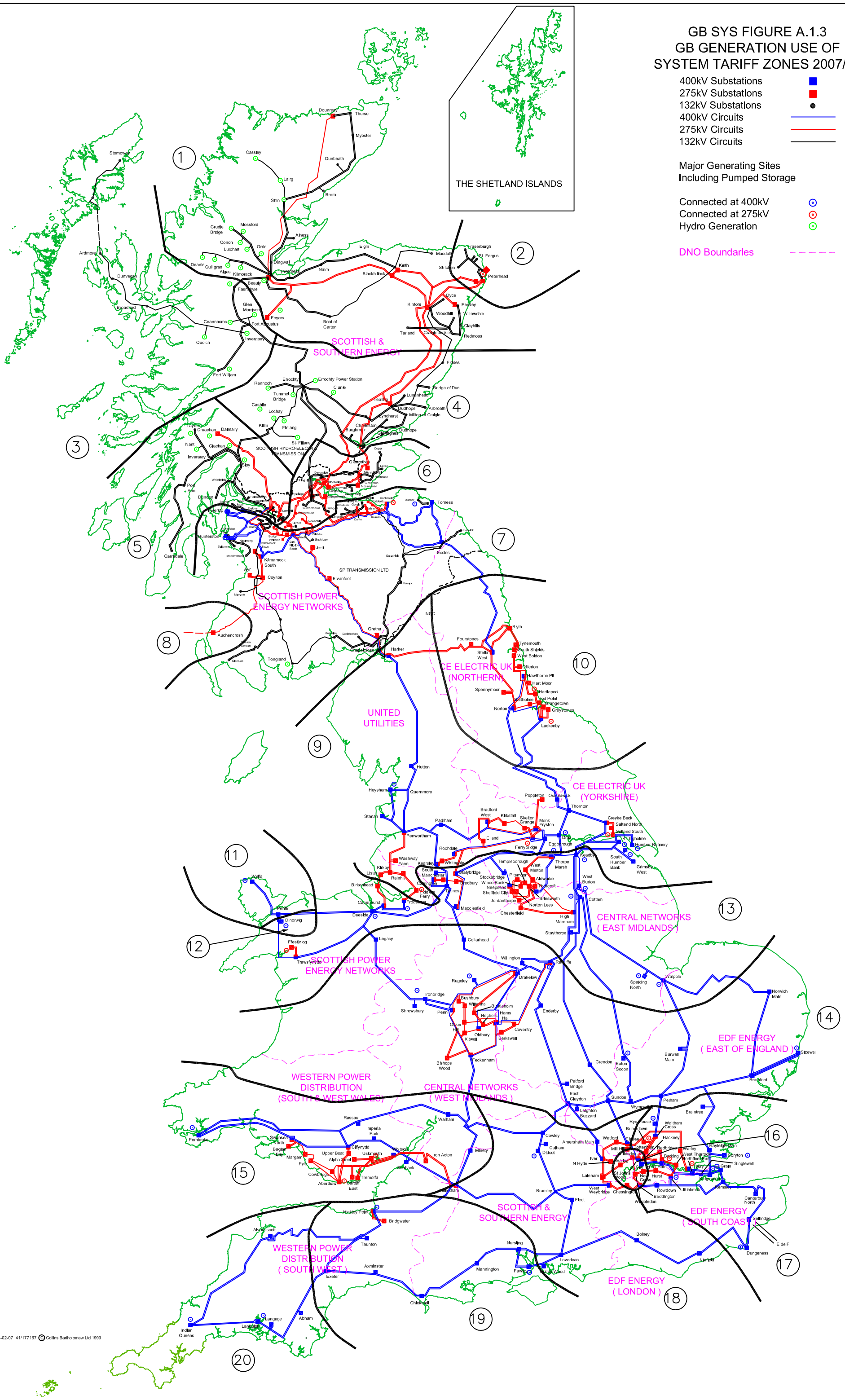

ISSUE C 1-02-07 41/177167 © Collins Bartholomew Ltd 1999

G.B. SYS. FIGURE A.1.4

GB DEMAND USE OF SYSTEM TARIFF ZONES 2007/08

400kV Substations
275kV Substations
132kV Substations
400kV Circuits
275kV Circuits
132kV Circuits

Major Generating Sites
Including Pumped Storage

Connected at 400kV
Connected at 275kV
Hydro Generation

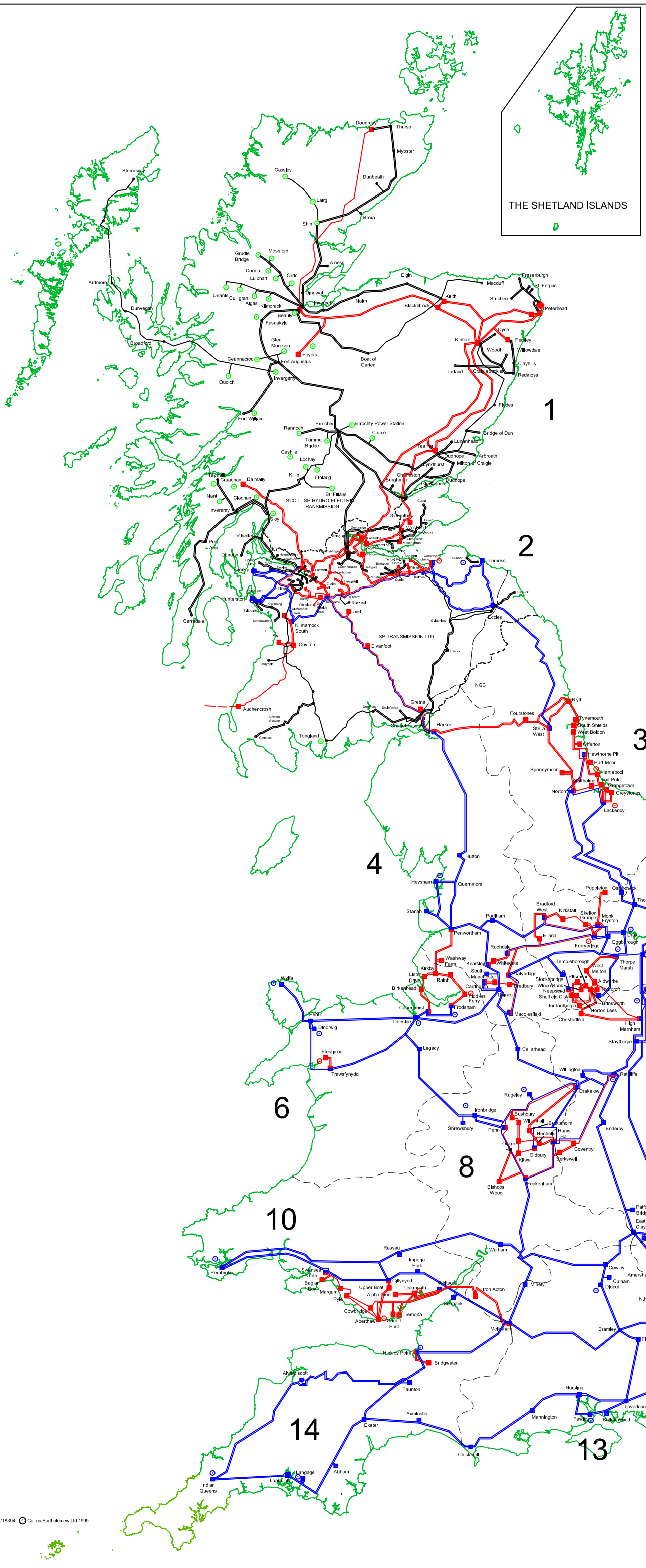

ISSUE P 1-02-07 41/18394 © Collins Bartholomew Ltd 1999

GB SYS FIG.A.1.5

GB NATIONAL PARKS 2007/2008

400kV Substations
275kV Substations
400kV CIRCUITS
275kV CIRCUITS

Major Generating Sites Including Pumped Storage

Connected at 400kV
Connected at 275kV

National Parks

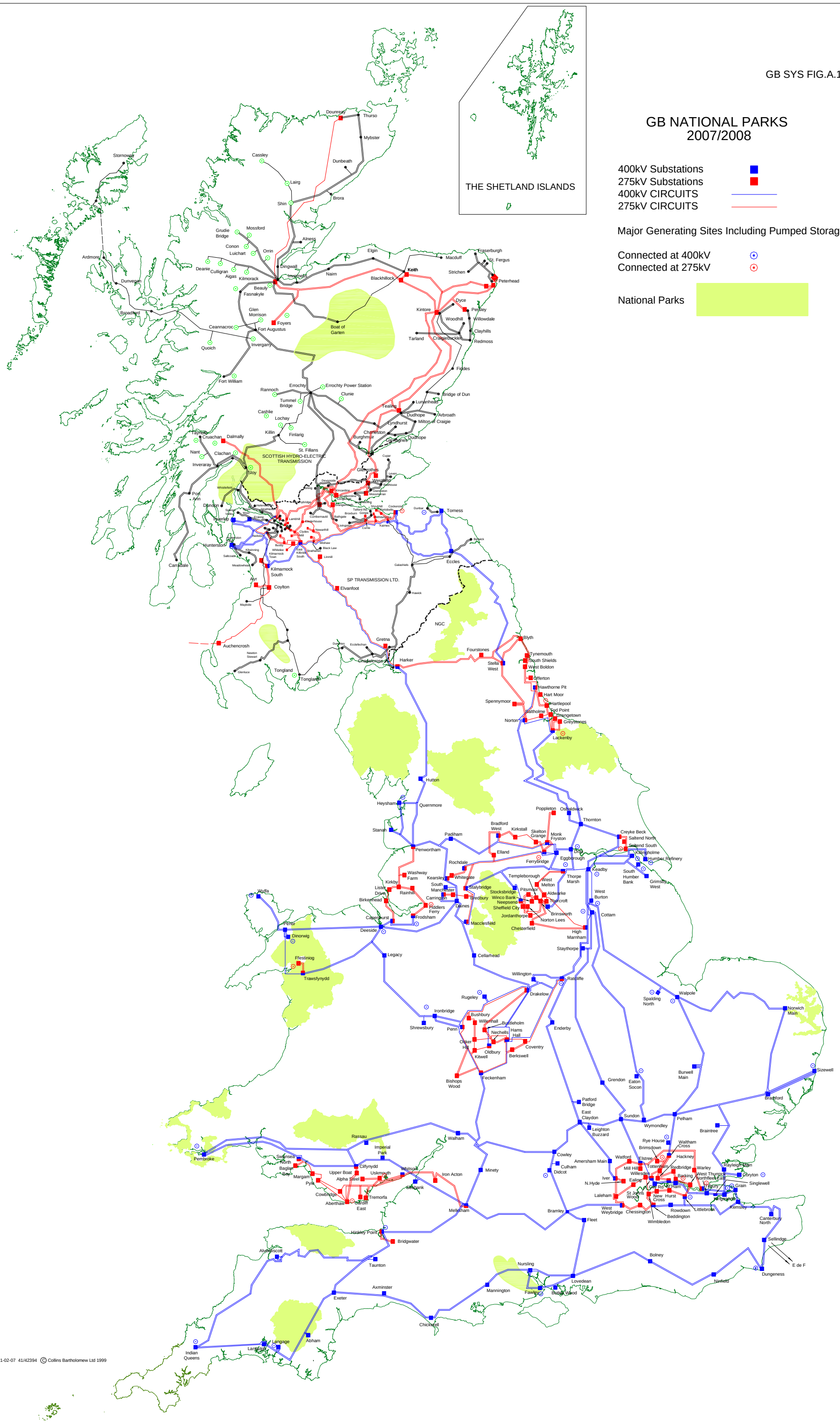

ISSUE G 1-02-07 41/42394 © Collins Bartholomew Ltd 1999

GB SYS FIG.A.1.6

GB TRANSMISSION BOUNDARIES AND SYS STUDY ZONES 2007/08

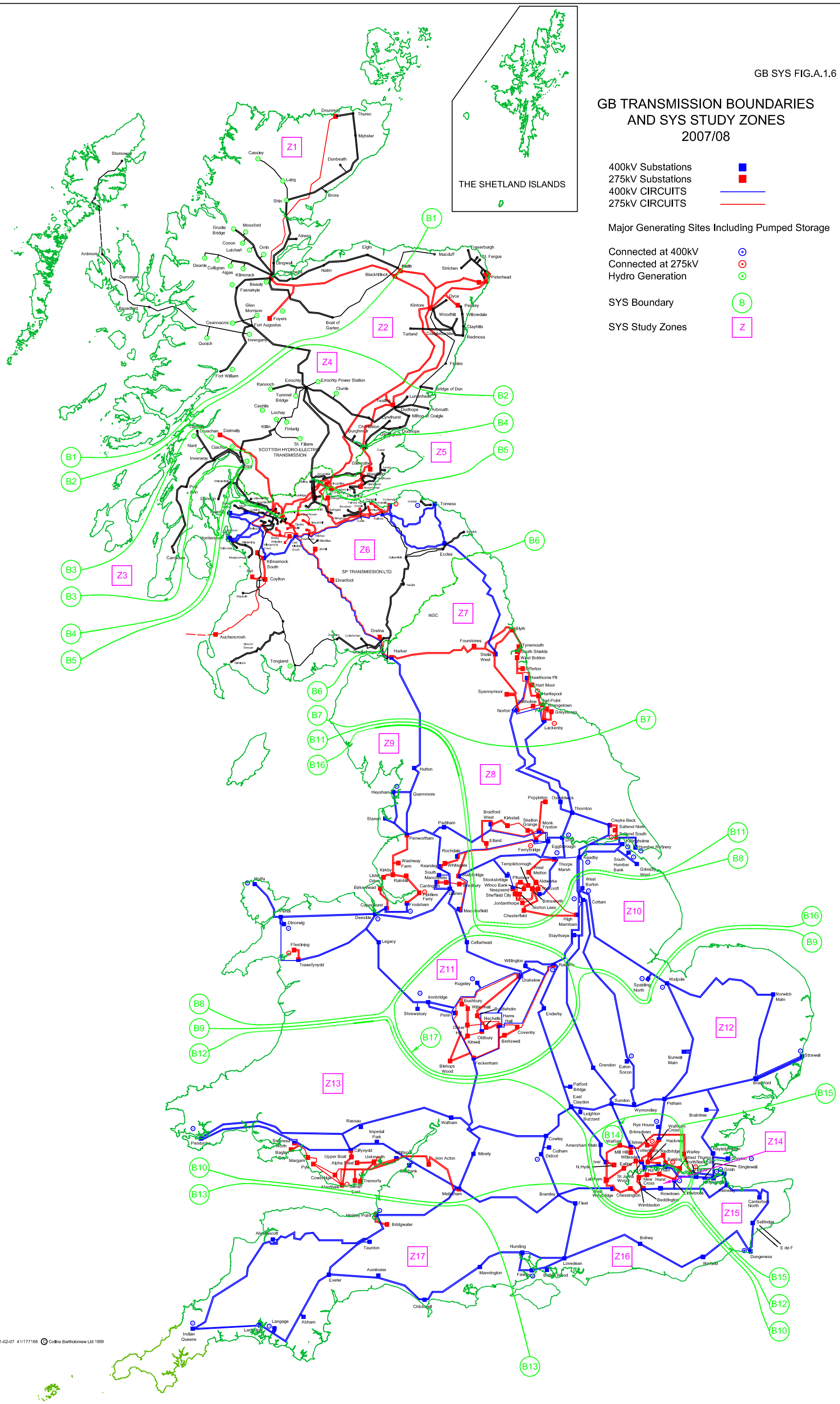

ISSUE C 1-02-07 41/177168 © Collins Bartholomew Ltd 1999

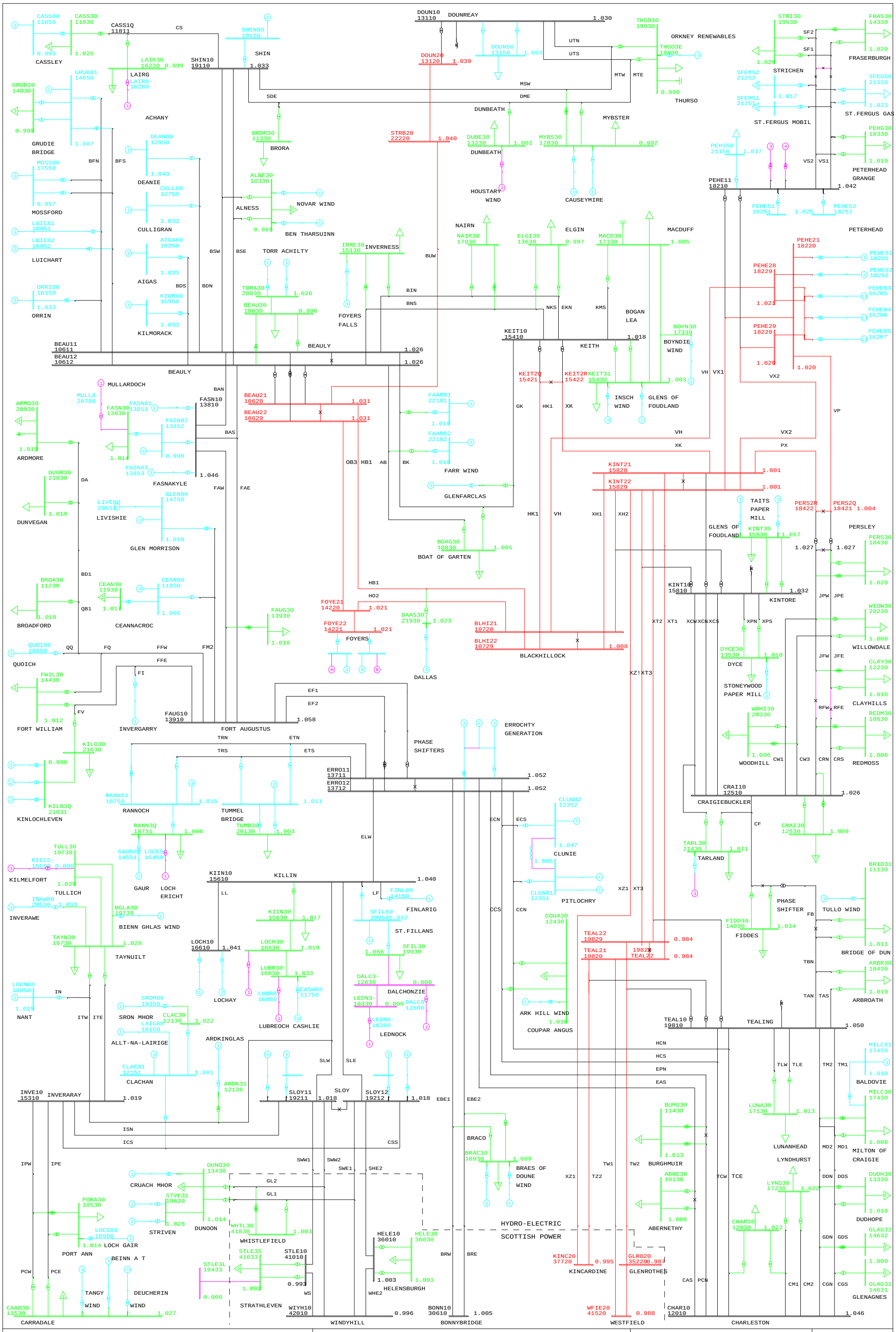

SCOTTISH HYDRO-ELECTRIC TRANSMISSION LTD

SEVEN YEAR STATEMENT 2007

ELECTRICAL BUS LAYOUT 2006/07

FIGURE A.2.1

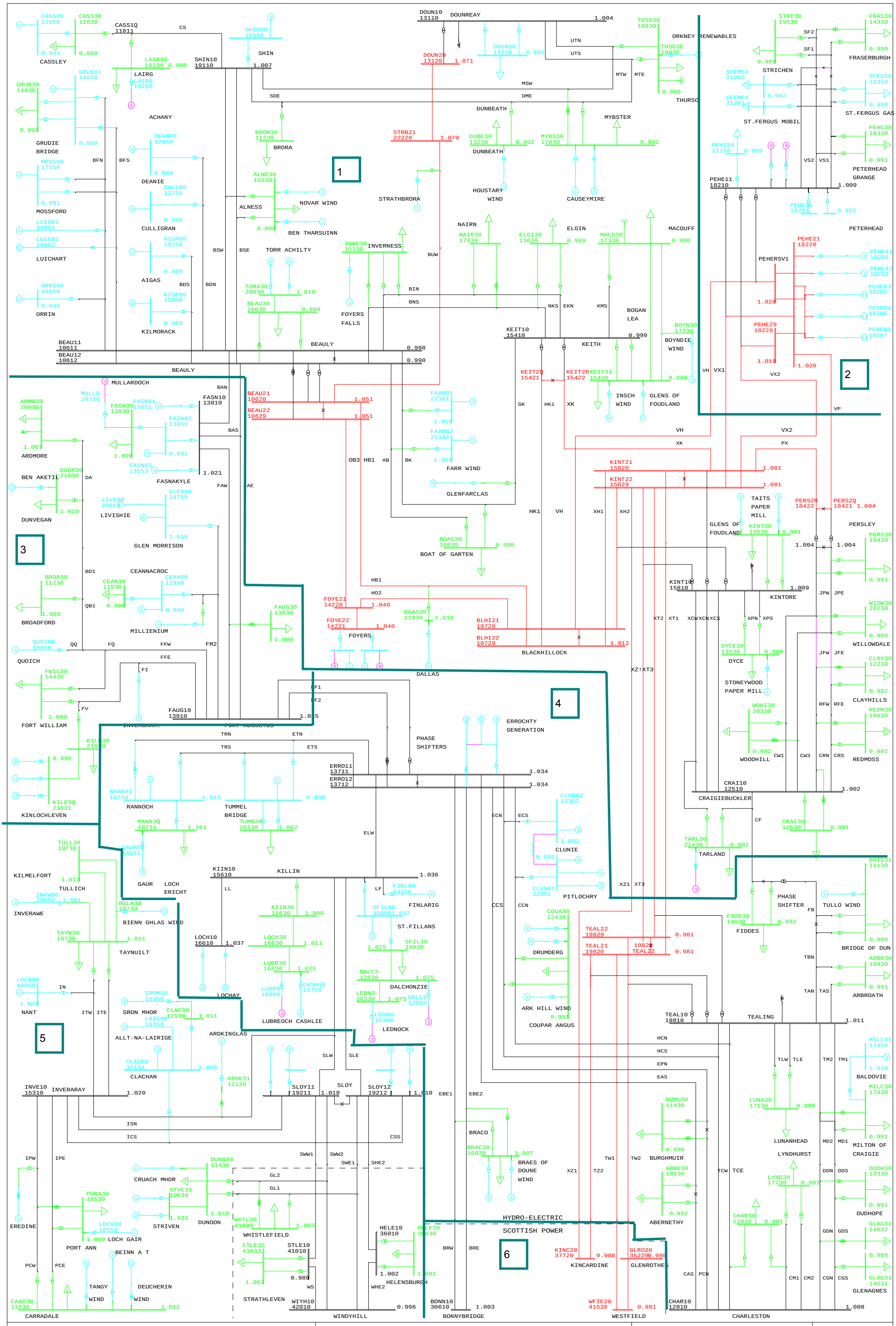

SCOTTISH HYDRO-ELECTRIC TRANSMISSION LTD

SEVEN YEAR STATEMENT 2007

ELECTRICAL BUS LAYOUT 2007/08

FIGURE A.2.2

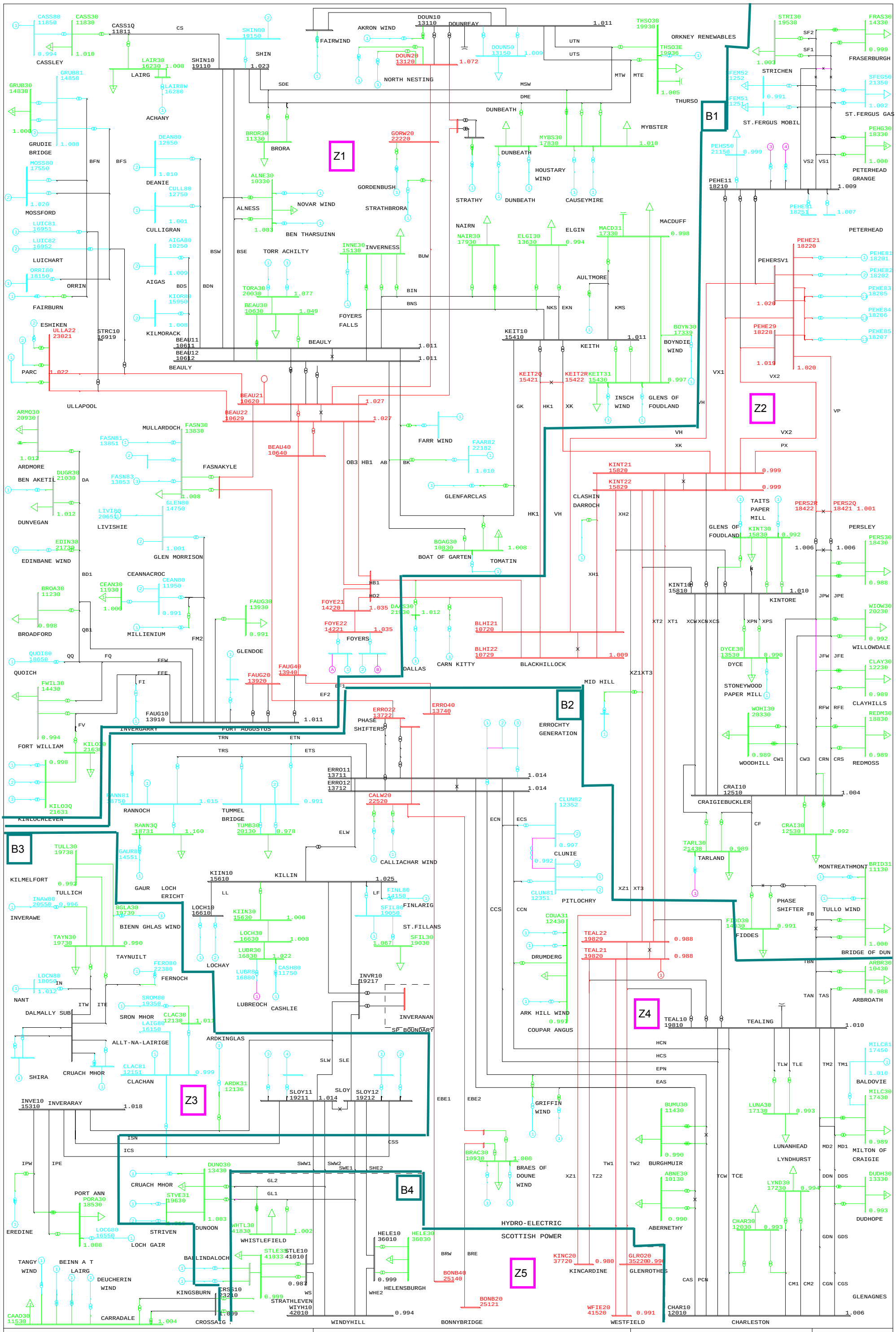
Z1
Z2
Z3
Z4
Z5
B1
B2
B3
B4
CASSLEY
LAIRG
ACHANY
SHIN
FAIRWIND
AKRON WIND
NORTH NESTING
DOUNREAY
ORKNEY RENEWABLES
THURSO
FRASERBURGH
STRICHEN
ST.FERGUS MOBIL
ST.FERGUS GAS
PETERHEAD GRANGE
PETERHEAD
GRUDIE BRIDGE
MOSSFORD
DEANIE
CULLIGRAN
LUICHART
ORRIN
FAIRBURN
AIGAS
KILMORACK
ESHIKEN
PARC
ULLAPOOL
BRORA
ALNESS
NOVAR WIND
BEN THARSUINN
TORR ACHILTY
GORDENBUSH
STRATHBRORA
DUNBEATH
MYBSTER
HOUSTARY WIND
STRATHY
CAUSEYMIRE
NAIRN
ELGIN
MACDUFF
INVERNESS
FOYERS FALLS
AULTMORE
BEAULY
KEITH
BOYNDIE WIND
INSCH WIND
GLENS OF FOUDLAND
PEHERSV1
PEHE21 18220
PEHE29 18228
PEHE11 18210
PEHE91 18251
PEHE81 18201
PEHE82 18202
PEHE83 18205
PEHE84 18206
PEHE85 18207
ARDMORE
BEN AKETIL
DUNVEGAN
LIVISHIE
GLEN MORRISON
MULLARDOCH
FASNAKYLE
EDINBANE WIND
CEANNACROC
MILLIENIUM
BROADFORD
GLENDOE
QUOICH
FORT WILLIAM
INVERGARRY
FORT AUGUSTUS
FARR WIND
GLENFARCLAS
BOAT OF GARTEN
TOMATIN
CLASHIN DARROCH
TAITS PAPER MILL
GLENS OF FOUDLAND
PERSLEY
KINTORE
WILLOWDALE
DYCE
STONEYWOOD PAPER MILL
CLAYHILLS
WOODHILL
REDMOSS
CRAIGIEBUCKLER
TARLAND
MONTREATHMONT
TULLO WIND
BRIDGE OF DUN
ARBROATH
TEALING
BALDOVIE
MILTON OF CRAIGIE
DUDHOPE
GLENAGNES
CHARLESTON
FOYERS
DALLAS
CARN KITTY
BLACKHILLOCK
MID HILL
ERROCHTY GENERATION
PHASE SHIFTERS
RANNOCH
TUMMEL BRIDGE
CALLIACHAR WIND
CLUNIE
PITLOCHRY
KILMELFORT
TULLICH
INVERAWE
BIENN GHLAS WIND
TAYNUILT
FERNOCH
LOCHAY
LUBREOCH
CASHLIE
FINLARIG
ST.FILLANS
DRUMDERG
ARK HILL WIND
COUPAR ANGUS
NANT
DALMALLY SUB
SRON MHOR
ALLT-NA-LAIRIGE
ARDKINGLAS
CRUACH MHOR
CLACHAN
INVERANAN
SP BOUNDARY
INVERARAY
GRIFFIN WIND
BRAES OF DOUNE WIND
BURGHMUIR
ABERNETHY
LUNANHEAD
LYNDHURST
HYDRO-ELECTRIC
SCOTTISH POWER
PORT ANN
EREDINE
LOCH GAIR
STRIVEN
DUNOON
WHISTLEFIELD
BALLINDALOCH
KINGSBURN
STRATHLEVEN
HELENSBURGH
TANGY WIND
BEINN A T LAIRG
DEUCHERIN WIND
CARRADALE
CROSSAIG
WINDYHILL
BONNYBRIDGE
KINCARDINE
GLENROTHES
WESTFIELD
CAS PCN
CHAR10 12010
1.006
SCOTTISH HYDRO-ELECTRIC TRANSMISSION LTD
SEVEN YEAR STATEMENT 2007
ELECTRICAL BUS LAYOUT 2013/14
FIGURE A.2.3
400KV
275KV
132KV
<=33KV

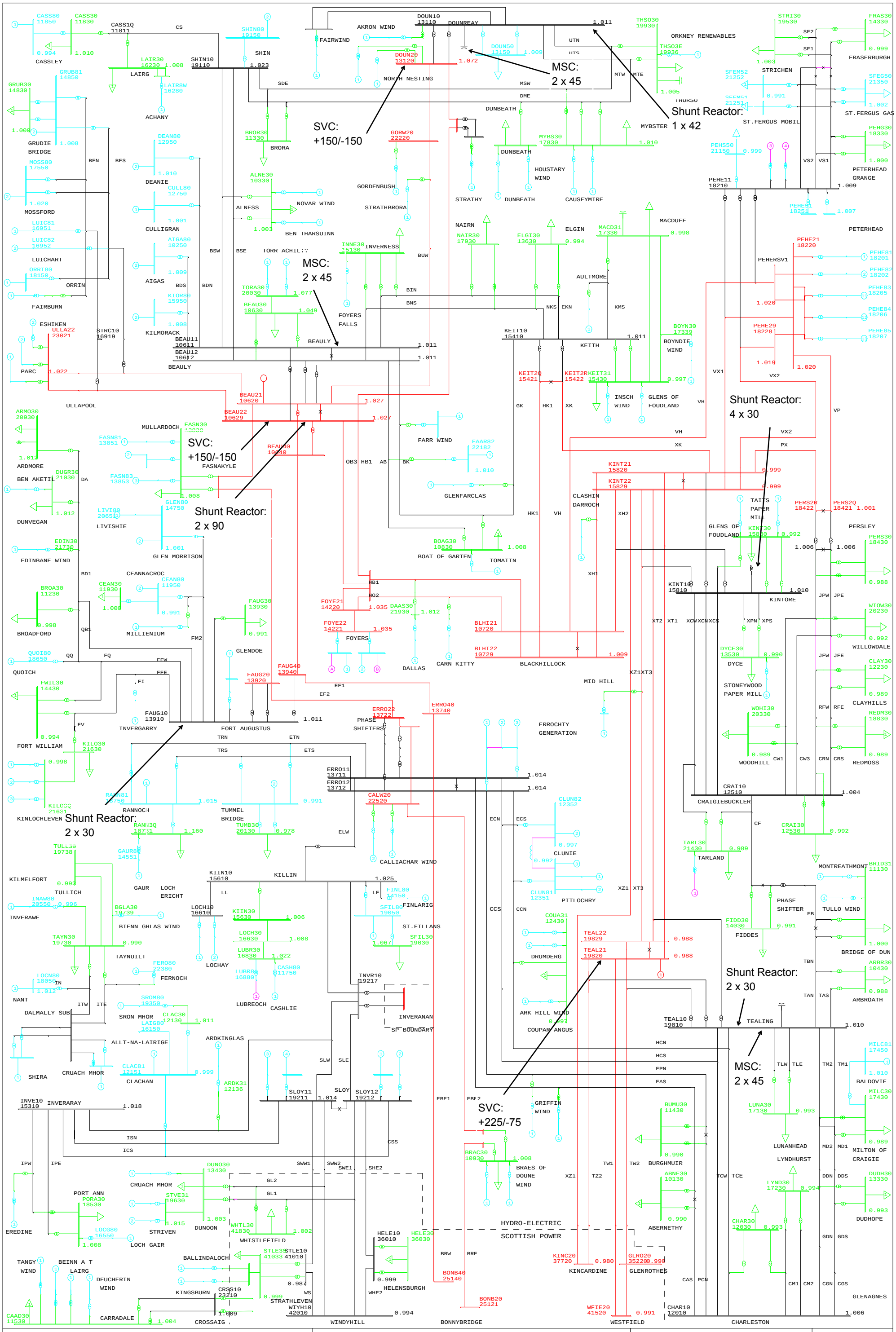

SCOTTISH HYDRO-ELECTRIC TRANSMISSION LTD

SEVEN YEAR STATEMENT 2007

ELECTRICAL BUS LAYOUT 2013/14

FIGURE A.2.4

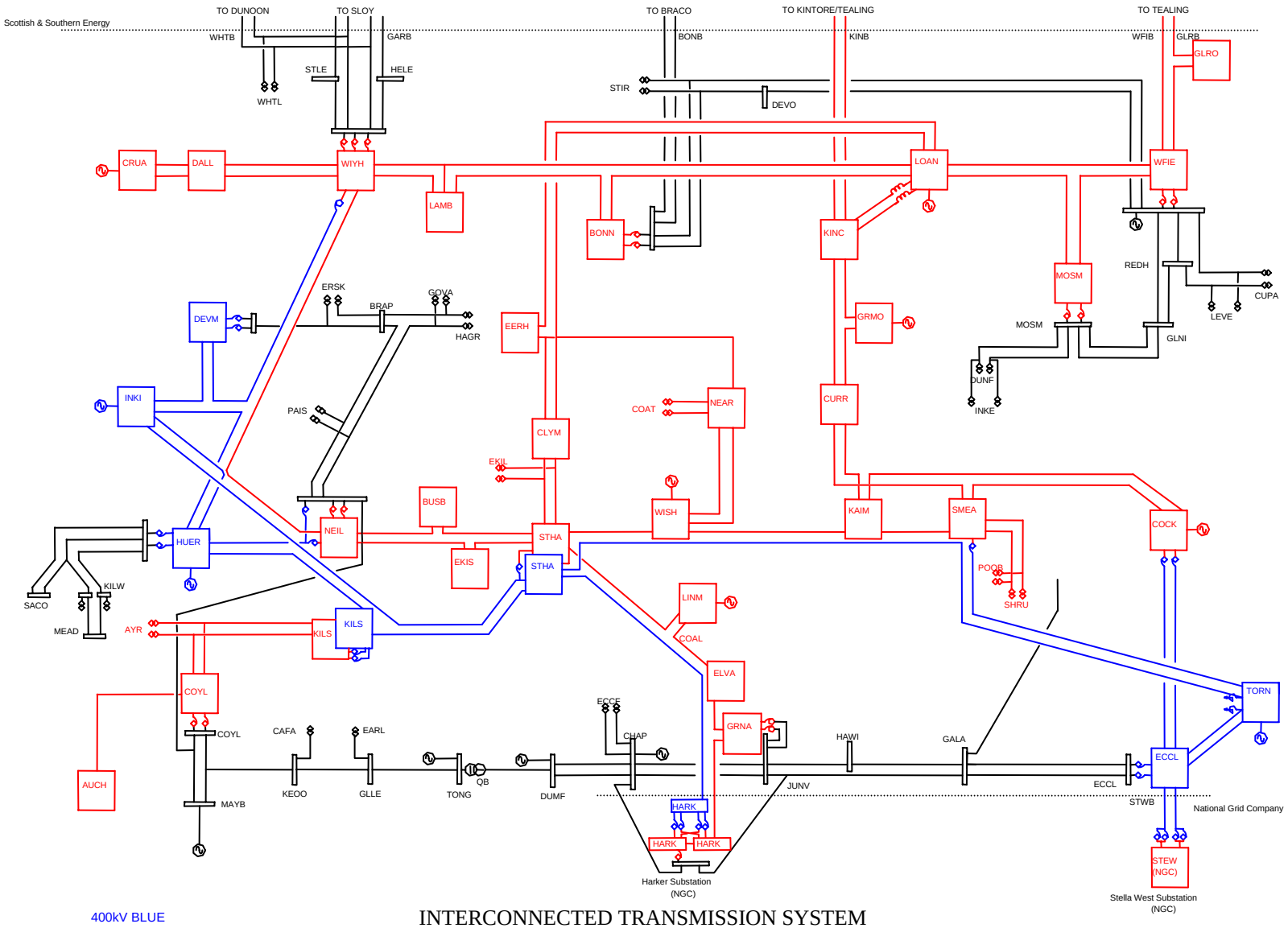

400kV BLUE
275kV RED
132kV BLACK

INTERCONNECTED TRANSMISSION SYSTEM
SPTL Existing Transmission System, April 2007

Figure A.3.1

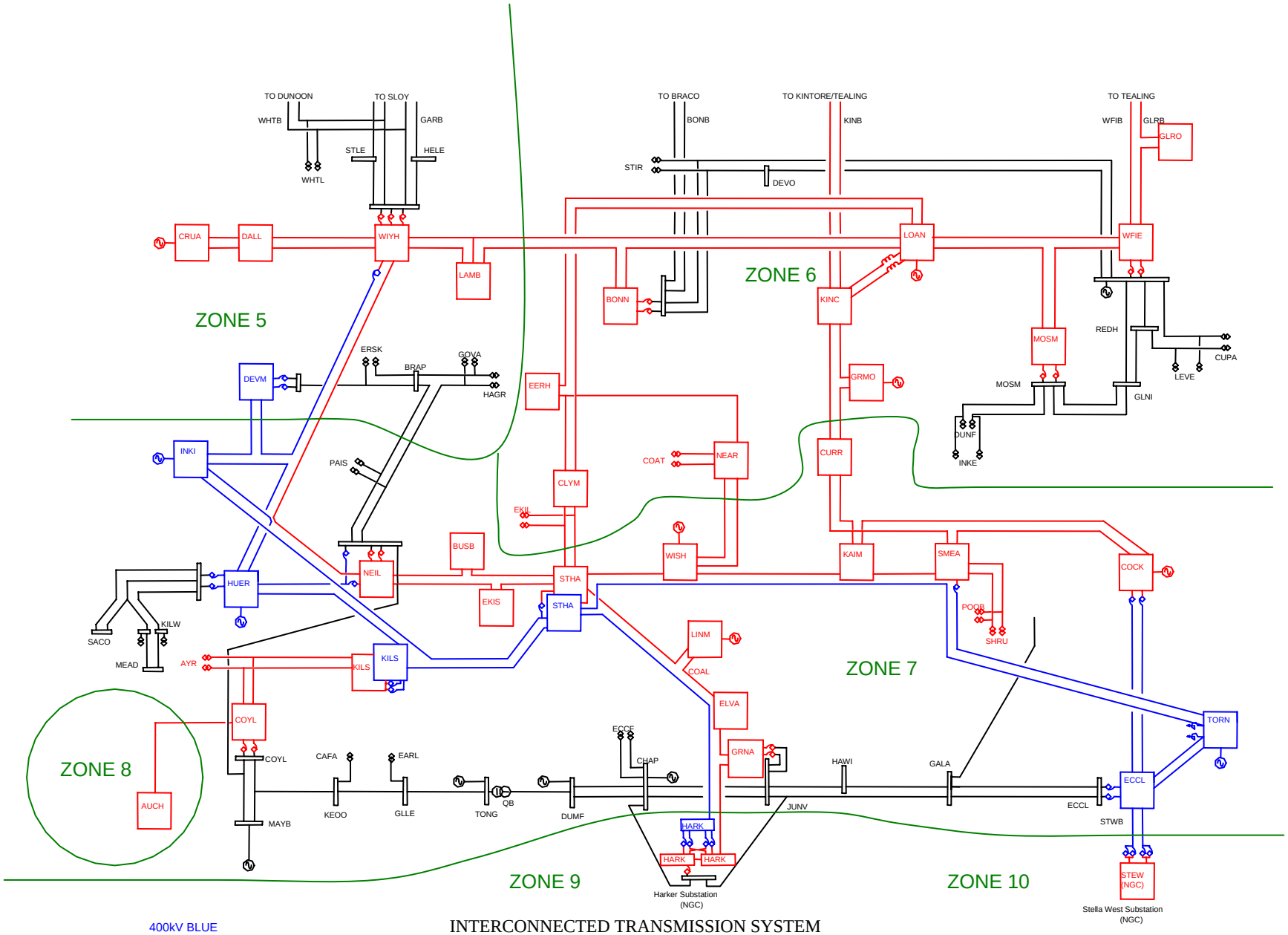

400kV BLUE
275kV RED
132kV BLACK

INTERCONNECTED TRANSMISSION SYSTEM
SPTL Generation Use of System Tariff Zones (Electrical), April 2007

Figure A.3.2

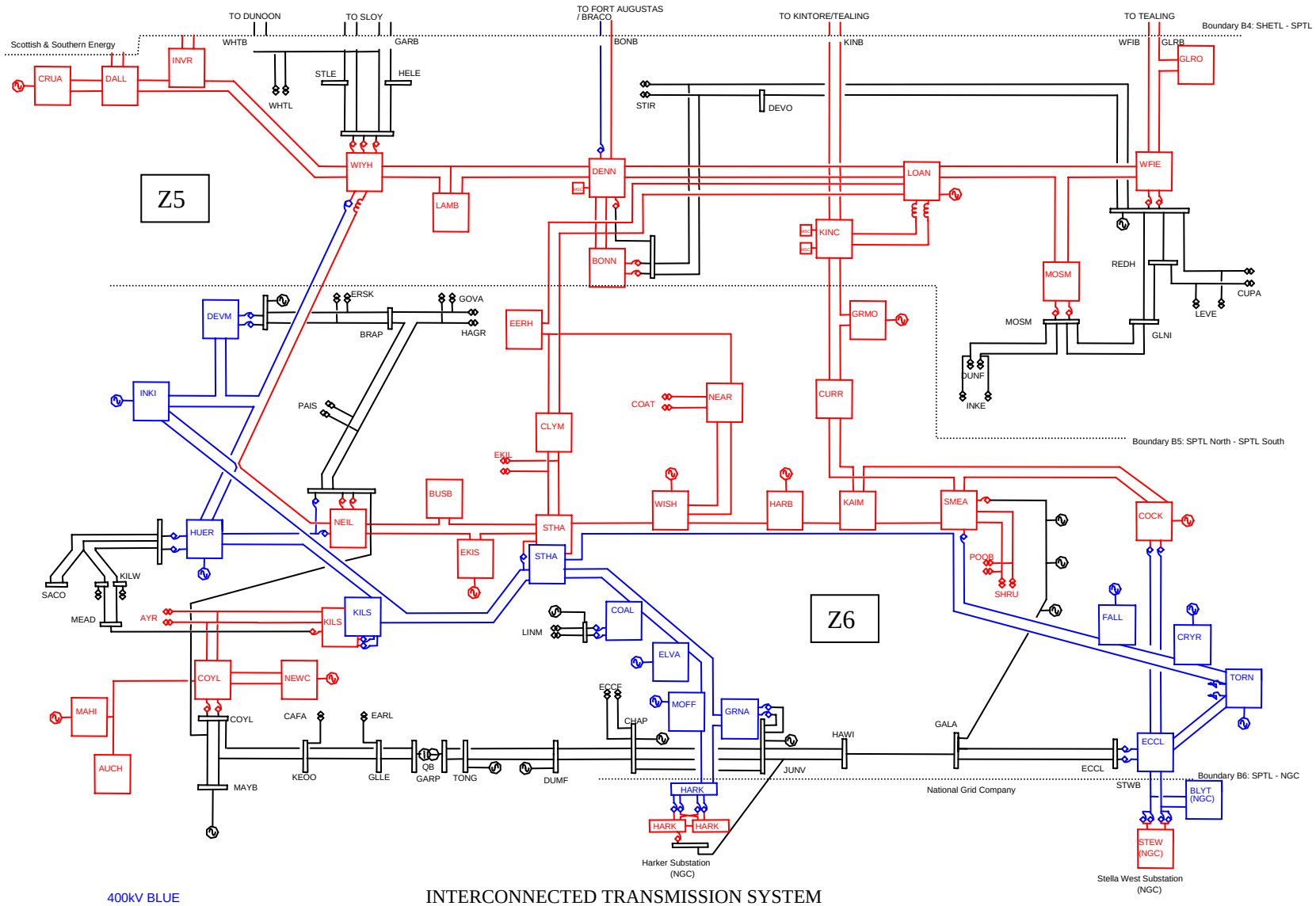

INTERCONNECTED TRANSMISSION SYSTEM
SPTL Transmision Boundaries and SYS Study Zones, 2013/14

Figure A.3.3

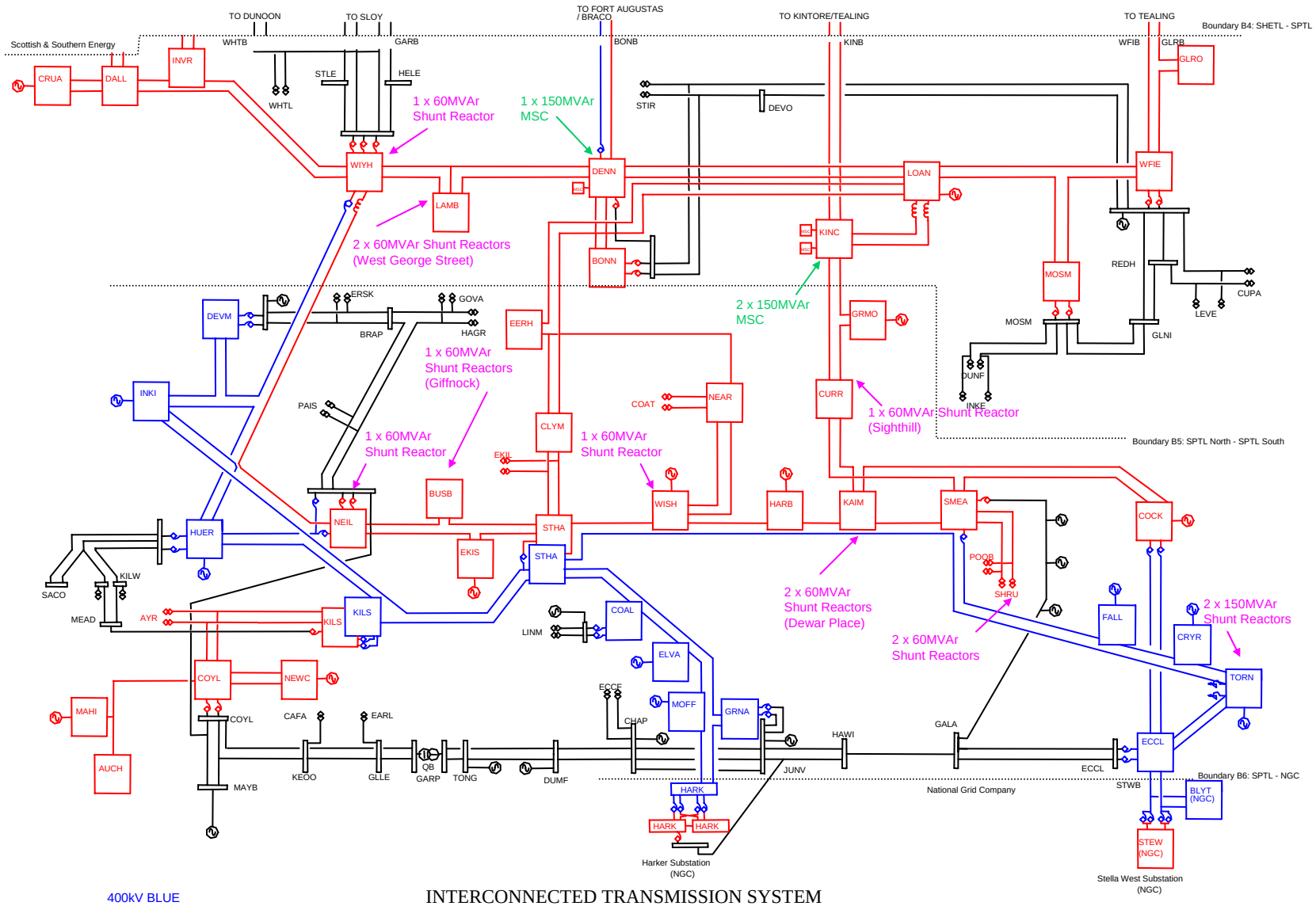

400kV BLUE
275kV RED
132kV BLACK

INTERCONNECTED TRANSMISSION SYSTEM
SPTL Existing & Planned Reactive Compensation, 2013/14

Figure A.3.4

GB SYS FIG. A.4.1. – NGET EXISTING TRANSMISSION SYSTEM – 2006/07

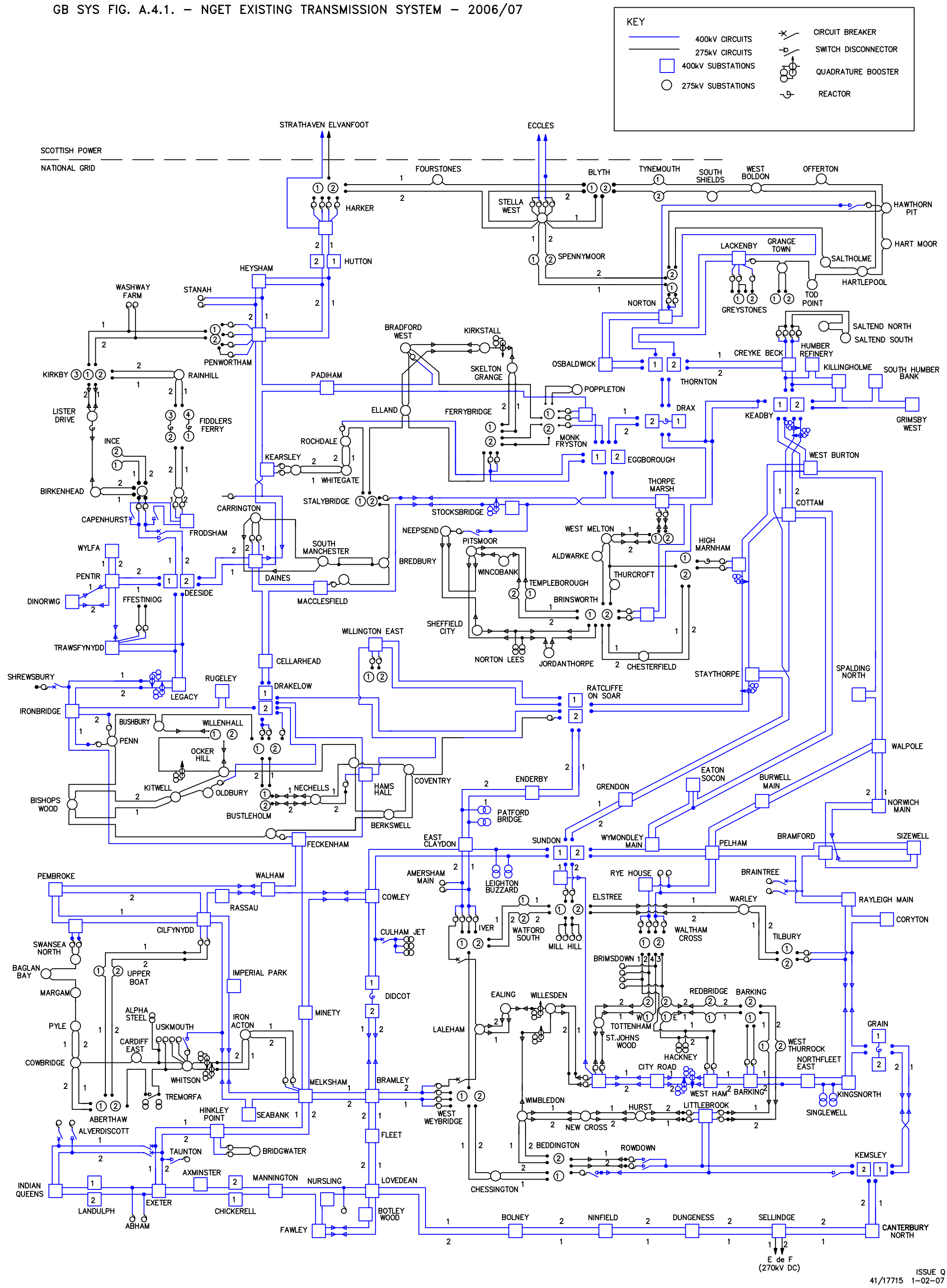

GB SYS FIG. A.4.2. NGET GENERATION USE OF SYSTEM TARIFF ZONES (ELECTRICAL) 2007/08

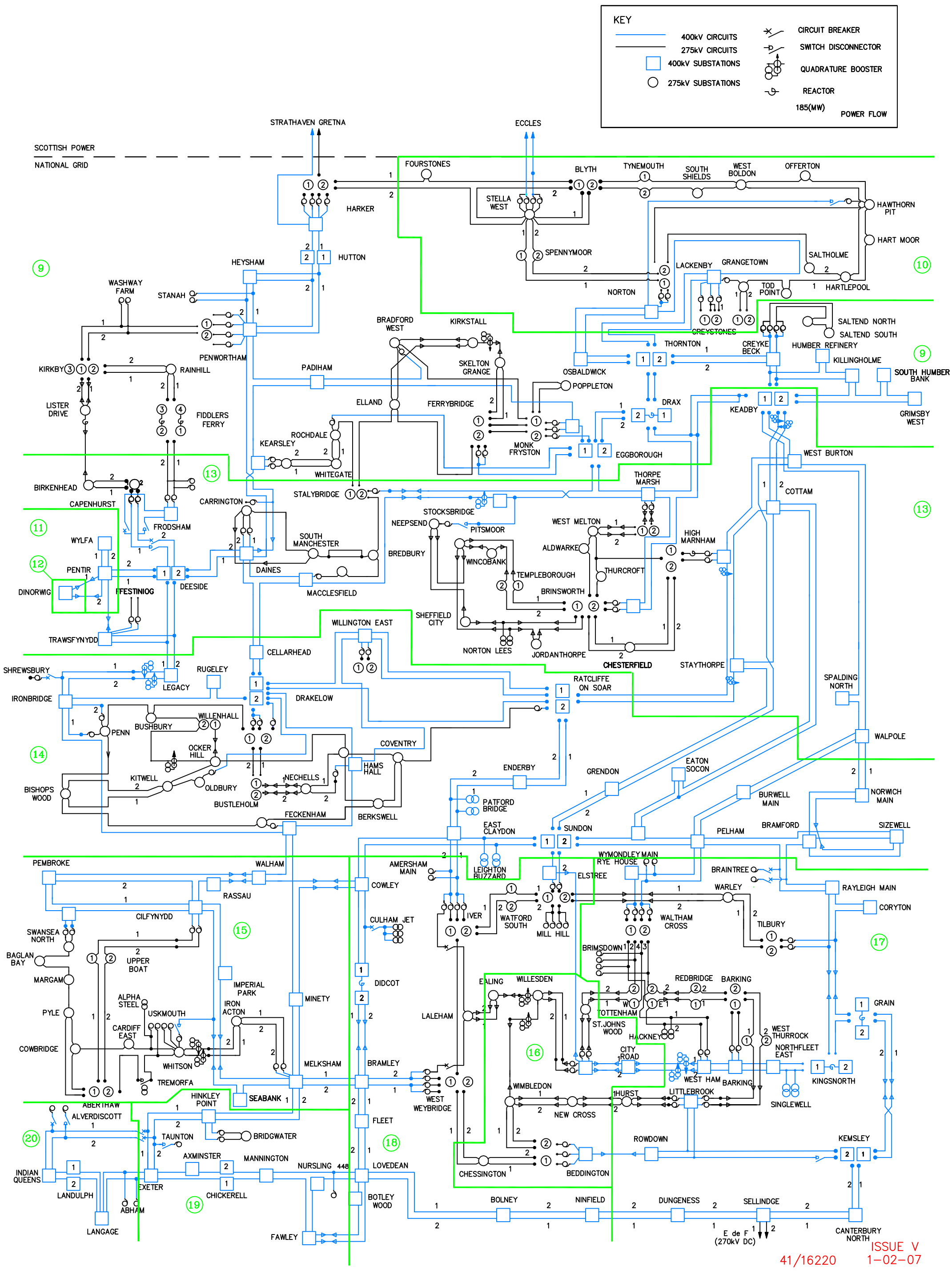

41/16220

ISSUE V
1-02-07

GB SYS FIG. A.4.3. NGET TRANSMISSION BOUNDARIES AND SYS STUDY ZONES – 2013/14

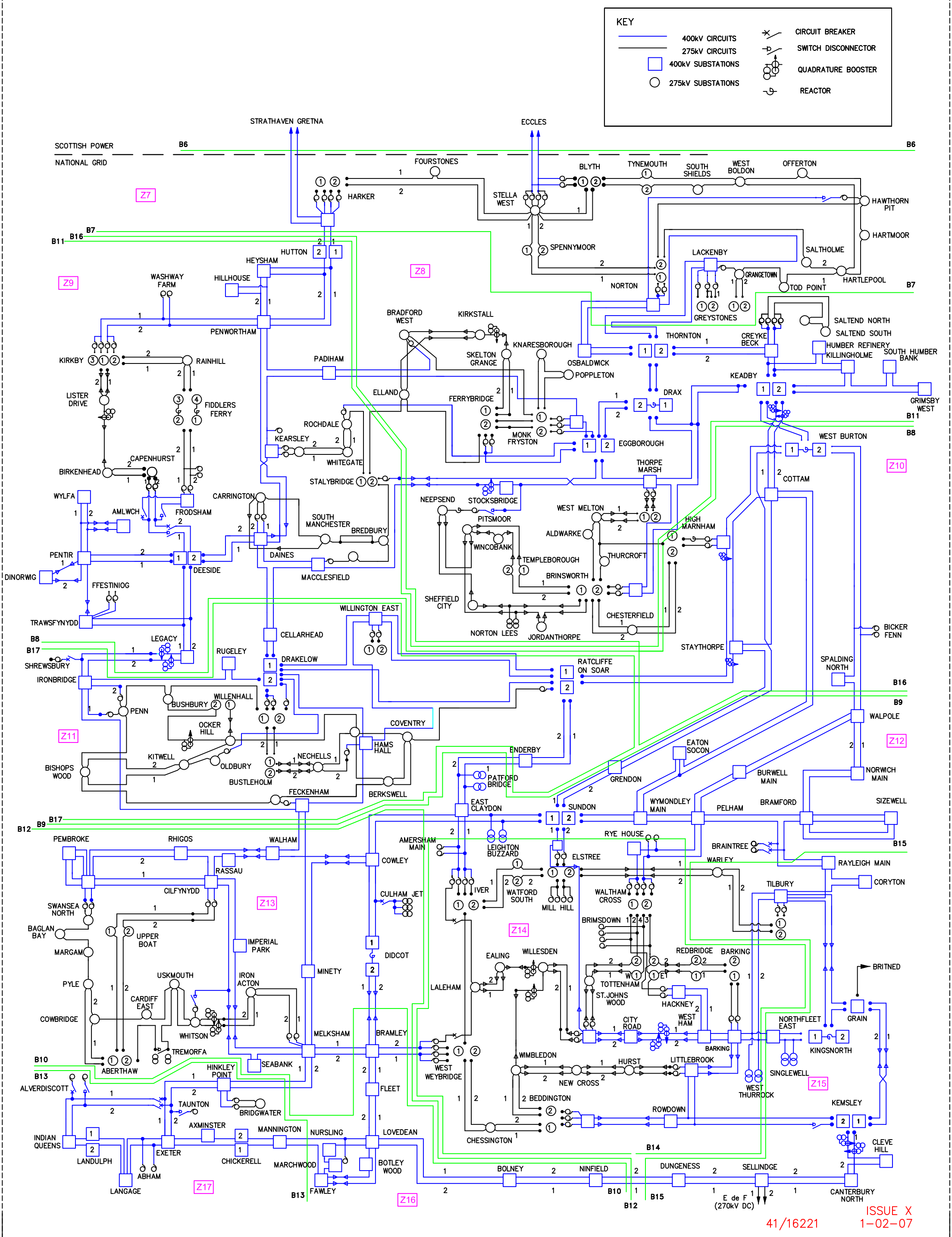

ISSUE X
1-02-07

41/16221

GB SYS. FIG. A.4.4
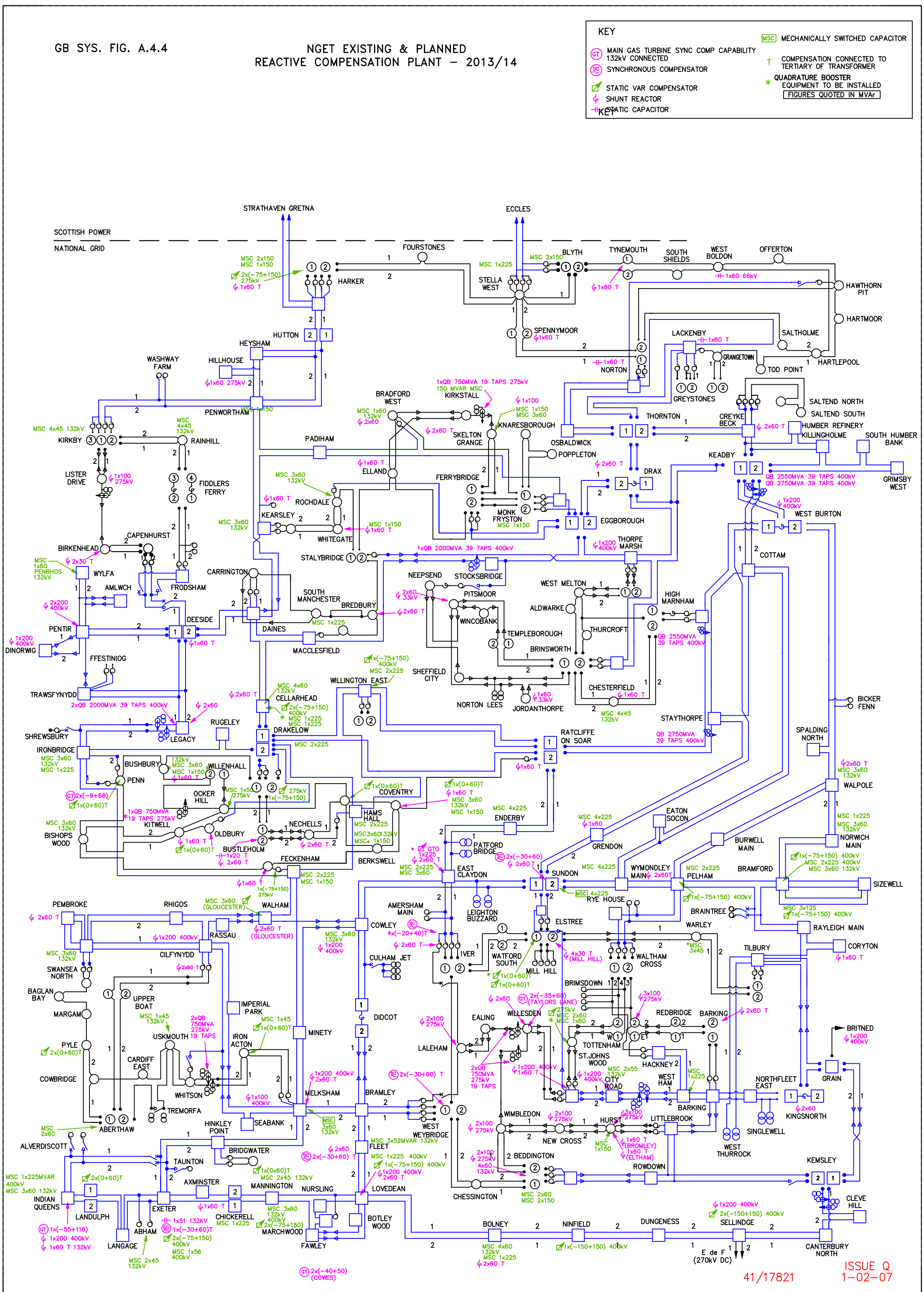
NGET EXISTING & PLANNED REACTIVE COMPENSATION PLANT – 2013/14